ECSE 281
Homework 7

Xander Jhaveri
Due 3-5-26

Problem 1

a)

$$F = \sum_{X,Y,Z} (0,3,5)$$

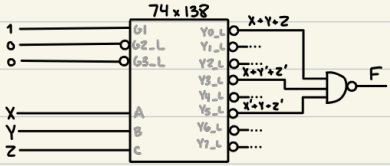

b)

$$F = \sum_{W,X,Y,Z} (1,4,6,7,8,9,10,12)$$

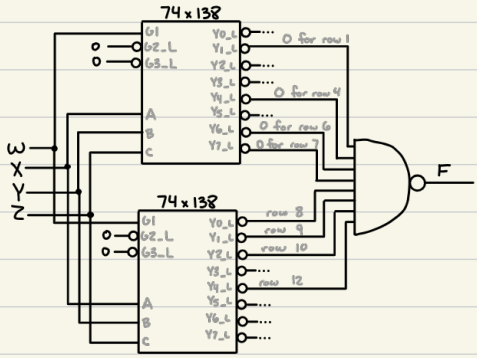

Problem 2

Full Adder:

a	b	c_{in}	s	c_{out}
0	0	0	0	0
0	0	1	1	0
0	1	0	1	0
0	1	1	0	1
1	0	0	1	0
1	0	1	0	1
1	1	0	0	1
1	1	1	1	1

$$S = \prod_{a,b,c_{in}} (0,3,5,6)$$

$$C_{out} = \sum_{a,b,c_{in}} (3,5,6,7)$$

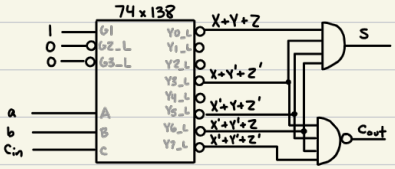

Problem 3

I will make a priority encoder with active high input and output

src3 will be the highest priority, then src2, and so on

$H_3 = S_3$, $H_2 = S_3' \cdot S_2$, $H_1 = S_3' \cdot S_2' \cdot S_1$, $H_0 = S_3' \cdot S_2' \cdot S_1' \cdot S_0$

$Y_0 = H_1 + H_3$, $Y_1 = H_2 + H_3$, $IDLE = S_3' \cdot S_2' \cdot S_1' \cdot S_0'$

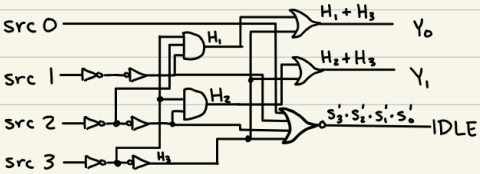

Problem 4

a)

Y \ WX	00	01	11	10
0	1 (0)	1 (2)	1 (6)	(4)
1	(1)	(3)	1 (7)	(5)

$X \cdot Y$ would fix a static hazard

$$\boxed{F = W \cdot X + W' \cdot Y' + X \cdot Y'}$$

b)

YZ \ WX	00	01	11	10
00	1 (0)	1 (4)	(12)	(8)
01	(1)	1 (5)	1 (13)	(9)
11	(3)	(7)	1 (15)	1 (11)
10	1 (2)	1 (6)	1 (14)	1 (10)

$W' \cdot X \cdot Y'$

$W \cdot X \cdot Z$

$X \cdot Y \cdot Z'$

$$\boxed{F = W \cdot Y + W' \cdot Z' + X \cdot Y' \cdot Z + W' \cdot X \cdot Y' + W \cdot X \cdot Z + X \cdot Y \cdot Z'}$$

Screenshot of Output

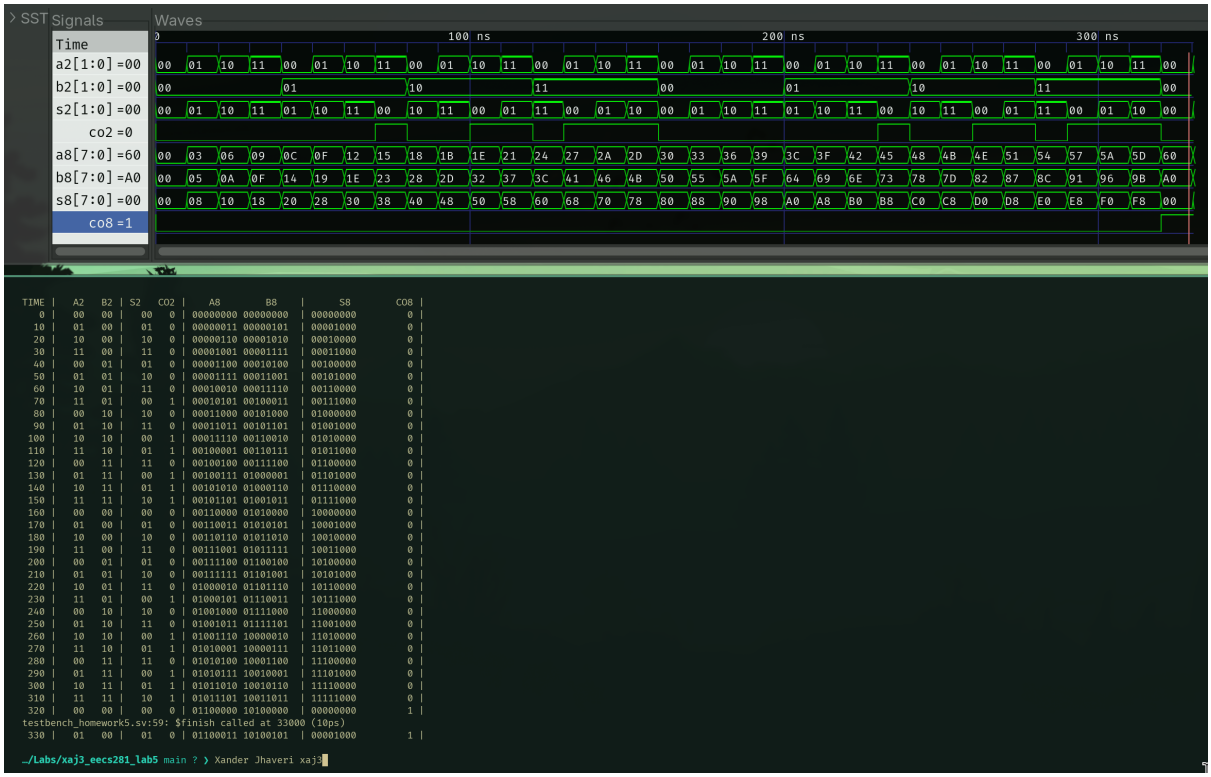

Figure 1: Screenshot of Waveform and Console Output

cla_adder.sv

```
module cla_adder #(
    parameter N = 8
) (
    input logic [N-1:0] a,
    input logic [N-1:0] b,
    input logic c_in,
    output logic [N-1:0] s,
    output logic c_out
);

  logic [N-1:0] p, g;
  logic [N:0] c;

  assign p = a ^ b;
  assign g = a & b;

  for (genvar i = 0; i <= N; i++) begin
    if (i == 0) assign c[i] = c_in;
    else assign c[i] = g[i-1] | (p[i-1] & c[i-1]);
  end

  assign s = p ^ c[N-1:0];
  assign c_out = c[N];
endmodule
```

testbench.sv

```
`timescale 1ns / 10ps
module testbench_lab5 ();

  logic [1:0] a2, b2, s2;
  logic [7:0] a8, b8, s8;
  logic co2, co8;



  cla_adder #(
      .N(2)
  ) UUT2 (
      .a(a2),
      .b(b2),
      .c_in(0),
      .s(s2),
      .c_out(co2)
  );

  cla_adder #(
      .N(8)
  ) UUT8 (
      .a(a8),
      .b(b8),
      .c_in(0),
      .s(s8),
      .c_out(co8)
  );

  initial begin
    a2 = 0;
    forever #10 a2++;
  end

  initial begin
    b2 = 0;
    forever #40 b2++;
  end

  initial begin
    a8 = 0;
    forever #10 a8 += 3;
  end

  initial begin
    b8 = 0;
    forever #10 b8 += 5;
  end

  initial begin
    $dumpfile("dump.vcd");
    $dumpvars(0, testbench_lab5);

    $display("TIME |   A2   B2 | S2   CO2 |    A8        B8    |      S8        CO8 | ");
    $monitor(" %3d | %4b %4b | %4b %3b | %8b %8b  | %8b  %8b |", $time, a2, b2, s2, co2, a8,
    ↪  b8,
             s8, co8);
```

```
    #330 $finish();
  end

endmodule
```